KOUGA
local municipality
Good Governance through Service Excellence

NOTICE NO: 80/2021 **RFQ: SUPPLY, DELIVERY AND INSTALLATION OF NEW SEWER MANHOLE COVER SLABS COMPLETE WITH LOCKABLE POLYMER MANHOLE COVERS AND FRAMES**	
Closing Date	**Wednesday, 28 April 2021 @ 12:00**
Location of Bid	**21 St Croix Street (back entrance) or 16 Woltemade Street (front entrance), Jeffrey's Bay, Room 122**
Name of Bidder:	
Contact Person (*Full Names*):	
Tel No.:	Cell No.:
Fax No.:	
Email Address:	
Kouga Municipal Supplier Database No.:	
Centralised Supplier Database No:	
Signature of Tenderer:	
Issued By: KOUGA LOCAL MUNICIPALITY, P.O BOX. 21, JEFFREYS BAY, 6330	
Any inquiries relating to this tender must be submitted in writing via e-mail to tenders@kouga.gov.za and copied to jdutoit@kouga.gov.za	

NB: THIS TENDER WILL BE EVALUATED ON THE 80/20 POINT SCORING SYSTEM

PLEASE TAKE NOTE OF ALL LISTED INSTRUCTIONS AND COMMENT

- IN ADDITION TO ALL APPLICABLE LEGISLATION THE SUPPLY CHAIN POLICY APPROVED 28 AUGUST 2020, WILL APPLY TO THIS TENDER.
- NB: PLEASE ENSURE THAT YOU FAMILIARIZE YOURSELF WITH THE COMPLETE DOCUMENT AND SIGN ALL PAGES WHERE IT IS REQUIRED TO DO SO. ALL DOCUMENTATION MUST BE ORIGINALLY SIGNED IN BLACK INK (COPIES OF SIGNARTORIES WILL NOT BE ACCEPTED)
- FAILURE TO FULLY COMPLETE THE COMPULSORY MUNICIPAL BIDDING DOCUMENTS WILL RESULT IN THE TENDER BEING CLASSIFIED AS NON-RESPONSIVE.
- THE NATIONAL TREASURY CENTRAL DATABASE AND TAX COMPLIANCE WILL BE VERIFIED ON DAY OF EVALUATING ANY TENDER. IN INSTANCES OF NON-COMPLIANCE BIDS WILL BE DECLARED NON-RESPONSIVE. (subject to MFMA Circular 90)
- TENDER DOCUMENTATION IS AVAILABLE ON E-TENDER AND AN ELECTRONIC COPY MAY BE REQUESTED FROM THE SUPPLY CHAIN OFFICE.
- PLEASE BE ADVISED THAT A COPY OF A CERTIFIED COPY DOES NOT CONSTITUTE A CERTIFIED COPY.
- DO NOT USE CORRECTION FLUID IN THE DOCUMENT. IF ANY MISTAKES ARE MADE, PLEASE DRAW A LINE THROUGH IT AND INITIAL NEXT TO IT.
- DOCUMENT TO BE COMPLETED IN INK. DOCUMENTATION COMPLETED IN PENCIL WILL NOT BE CONSIDERED.
- THE FOLLOWING DOCUMENTS MUST BE SUBMITTED WITHIN THE TIME SPECIFIED IN THE REQUEST**. FAILURE TO COMPLY WILL RESULT IN NON-ACCEPTANCE OF THE TENDER.THESE DOCUMENTS MAY BE REQUESTED AS SUPPORT TO THE CONTRACT FILE DOCUMENTATION FOR EVALUATION PURPOSES.**

    1. National Treasury Central Database Summary Report
    2. Business Registration Documents/ Formal Registration Documentation/ JV Agreements/Consortia/ Partnerships and Trust's – Applicable to all entities (i.e. Companies, Public & Private Entities, Partnerships and Joint Ventures). CM9/ Name Change Document will not suffice as Proof of Business Registration.
    3. A copy of a valid SARS Tax Compliance Status Pin number for all entities and all partners of Joint Venture)
    4. Certified ID copies.
    5. Latest Municipal Billing Clearance Certificate/ Copy of Municipal Account / Rental Documentation to be submitted
    6. Any Special Conditions of Contract Documentation- Must be submitted as set out in tender contract or upon request.

PERSONAL DETAILS OF THE TENDERER

PLEASE PROVIDE THE FOLLOWING DETAILS:

YOU ARE HEREBY INVITED TO BID FOR REQUIREMENTS OF THE KOUGA LOCAL MUNICIPALITY					
BID NUMBER:	**80 of 2021**	CLOSING DATE:	**28 April 2021**	CLOSING TIME:	**12:00**
DESCRIPTION	**SUPPLY, DELIVERY AND INSTALLATION OF NEW SEWER MANHOLE COVER SLABS COMPLETE WITH LOCKABLE POLYMER MANHOLE COVERS AND FRAMES**				
THE SUCCESSFUL BIDDER WILL BE REQUIRED TO FILL IN AND SIGN A WRITTEN CONTRACT FORM (MBD7).					

BID RESPONSE DOCUMENTS MAY BE DEPOSITED IN THE BID BOX SITUATED AT *(STREET ADDRESS*

Kouga Local Municipality: Woltemade Building
21 St Croix Street (back entrance) or 16 Woltemade Street (front entrance), Room 122
Jeffreys Bay
6330

SUPPLIER INFORMATION				
NAME OF BIDDER				
POSTAL ADDRESS				
STREET ADDRESS				
TELEPHONE NUMBER	CODE		NUMBER	
CELLPHONE NUMBER				
FACSIMILE NUMBER	CODE		NUMBER	
E-MAIL ADDRESS				
VAT REGISTRATION NUMBER				
TAX COMPLIANCE STATUS	TCS PIN:		**OR** CSD No:	
B-BBEE STATUS LEVEL VERIFICATION CERTIFICATE [TICK APPLICABLE BOX]	☐ Yes ☐ No		B-BBEE STATUS LEVEL SWORN AFFIDAVIT	☐ Yes ☐ No
[A B-BBEE STATUS LEVEL VERIFICATION CERTIFICATE/ SWORN AFFIDAVIT (FOR EMES & QSEs) MUST BE SUBMITTED IN ORDER TO QUALIFY FOR PREFERENCE POINTS FOR B-BBEE]				

ARE YOU THE ACCREDITED REPRESENTATIVE ***IN SOUTH AFRICA FOR THE GOODS /SERVICES /WORKS OFFERED?***	☐Yes ☐No [IF YES ENCLOSE PROOF]	*ARE YOU A FOREIGN BASED SUPPLIER FOR* ***THE GOODS /SERVICES /WORKS OFFERED?***	☐Yes ☐No [IF YES, ANSWER PART B:3]
TOTAL NUMBER OF ITEMS OFFERED		***TOTAL BID PRICE***	**R**
SIGNATURE OF BIDDER	……	***DATE***	
CAPACITY UNDER WHICH THIS BID IS SIGNED			

BIDDING PROCEDURE ENQUIRIES MAY BE DIRECTED TO:		**TECHNICAL INFORMATION MAY BE DIRECTED TO:**	
DEPARTMENT	Supply Chain Office	CONTACT PERSON	Mr. J. Du Toit
CONTACT PERSON		TELEPHONE NUMBER	0422002200
TELEPHONE NUMBER	042 200 2200	FACSIMILE NUMBER	
FACSIMILE NUMBER		E-MAIL ADDRESS	jdutoit@kouga.gov.za
E-MAIL ADDRESS	tenders@kouga.gov.za		

1. BID SUBMISSION:

1.1. BIDS MUST BE DELIVERED BY THE STIPULATED TIME TO THE CORRECT ADDRESS. LATE BIDS WILL NOT BE ACCEPTED FOR CONSIDERATION.

1.2. **ALL BIDS MUST BE SUBMITTED ON THE OFFICIAL FORMS PROVIDED–(NOT TO BE RE-TYPED) OR ONLINE**

1.3. THIS BID IS SUBJECT TO THE PREFERENTIAL PROCUREMENT POLICY FRAMEWORK ACT AND THE PREFERENTIAL PROCUREMENT REGULATIONS, 2017, THE GENERAL CONDITIONS OF CONTRACT (GCC) AND, IF APPLICABLE, ANY OTHER SPECIAL CONDITIONS OF CONTRACT.

2. TAX COMPLIANCE REQUIREMENTS

2.1 BIDDERS MUST ENSURE COMPLIANCE WITH THEIR TAX OBLIGATIONS.

2.2 BIDDERS ARE REQUIRED TO SUBMIT THEIR UNIQUE PERSONAL IDENTIFICATION NUMBER (PIN) ISSUED BY SARS TO ENABLE THE ORGAN OF STATE TO VIEW THE TAXPAYER'S PROFILE AND TAX STATUS.

2.3 APPLICATION FOR THE TAX COMPLIANCE STATUS (TCS) CERTIFICATE OR PIN MAY ALSO BE MADE VIA E-FILING. IN ORDER TO USE THIS PROVISION, TAXPAYERS WILL NEED TO REGISTER WITH SARS AS E-FILERS THROUGH THE WEBSITE WWW.SARS.GOV.ZA.

2.4 FOREIGN SUPPLIERS MUST COMPLETE THE PRE-AWARD QUESTIONNAIRE IN PART B:3.

2.5 BIDDERS MAY ALSO SUBMIT A PRINTED TCS CERTIFICATE TOGETHER WITH THE BID.

2.6 IN BIDS WHERE CONSORTIA / JOINT VENTURES / SUB-CONTRACTORS ARE INVOLVED, EACH PARTY MUST SUBMIT A SEPARATE TCS CERTIFICATE / PIN / CSD NUMBER.

2.7 WHERE NO TCS IS AVAILABLE BUT THE BIDDER IS REGISTERED ON THE CENTRAL SUPPLIER DATABASE (CSD), A CSD NUMBER MUST BE PROVIDED.	
3. QUESTIONNAIRE TO BIDDING FOREIGN SUPPLIERS	
3.1. IS THE ENTITY A RESIDENT OF THE REPUBLIC OF SOUTH AFRICA (RSA)?	☐ YES ☐ NO
3.2. DOES THE ENTITY HAVE A BRANCH IN THE RSA?	☐ YES ☐ NO
3.3. DOES THE ENTITY HAVE A PERMANENT ESTABLISHMENT IN THE RSA?	☐ YES ☐ NO
3.4. DOES THE ENTITY HAVE ANY SOURCE OF INCOME IN THE RSA?	☐YES ☐ NO
3.5. IS THE ENTITY LIABLE IN THE RSA FOR ANY FORM OF TAXATION?	☐ YES ☐ NO
IF THE ANSWER IS "NO" TO ALL OF THE ABOVE, THEN IT IS NOT A REQUIREMENT TO REGISTER FOR A TAX COMPLIANCE STATUS SYSTEM PIN CODE FROM THE SOUTH AFRICAN REVENUE SERVICE (SARS) AND IF NOT REGISTER AS PER 2.3 ABOVE.	

CERTIFICATION:

I declare that the information in this annexure is true and correct in all respects.

NB: FAILURE TO PROVIDE ANY OF THE ABOVE PARTICULARS MAY RENDER THE BID INVALID.

NO BIDS WILL BE CONSIDERED FROM PERSONS IN THE SERVICE OF THE STATE.

SIGNATURE OF BIDDER: ……

CAPACITY UNDER WHICH THIS BID IS SIGNED: ……

DATE:

KOUGA MUNICIPALITY

GOVERNMENT PROCUREMENT:

General Conditions of Contract- applicable to this contract- please refer to www.treasury.gov.za
The Kouga Municipality Supply Chain Management policy as approved on the 28 August 2020 will be applicable to the contract– please refer to www.kouga.gov.za
The 2017 Preferential Procurement Regulations

KOUGA LOCAL MUNICIPALITY
NOTICE 80/2021

SPECIAL CONDITIONS

1. **The stipulated minimum threshold(s) for local production and content (refer to Annex A of SATS 1286:2011) for this bid is/are as per Table 1 below:**

Table 1: Minimum Threshold for Local Production

Description of services, works or goods	Stipulated minimum threshold
Concrete sewage manholes	100%

SPECIFICATIONS OF CONTRACT

1. SAMPLES

1.1 Samples may be required from the successful bidder prior to delivery.

2. SUPPLY, DELIVERY AND INSTALLATION

2.1 Successful Bidders are responsible for the supply, delivery and installation of the manholes with covers and frames onto the existing sewer manhole. Installation can be done from Monday to Thursday to be done between 7:30am to 16h00pm and on Friday between 7:30am to 14h00pm.

2.2 The installation will take place in areas in Jeffreys Bay, specifically at:

2.1.1 Oceanview;
2.1.2 Pellsrus;
2.1.3 Fountains Estate in Jeffreys Bay.

3. KEY PERFORMANCE INDICATORS

3.1 The Kouga Municipality has a system by which service delivery is measured. The appropriate Key Performance Indicators (KPI's) to which the Service Provider in this tender will be measured are as follows.
3.2 Timeous delivery of the correct quantities as per order of items.
3.3 Quality of product and lead time of delivery as per tender document.
3.4 The Service Provider will be notified if the KPI's are not met.

4. LEAD TIME

4.1 Lead time will not exceed two (2) working weeks from receipt of official order.

5. DETAILS FOR THE REPLACEMENT OF SEWER MANHOLE COVERS AND FRAMES

New sewer manhole covers and frames will have to be installed onto existing, operational sewer manholes. The existing manholes will have to be removed and carted to a spoil site and the site be made clean and good on completion.

Please refer to the attachment for the detail of the sewer manhole cover slab to be installed. Type 2A or 4A Lockable Polymer manhole covers and frames to SANS 1882/2003, Maverick or Similar approved must be supplied. The topslab must be constructed as indicated, using 25MPa /19mm concrete.

It is essential that the cover and frame be polymer and **lockable.**

The tendered rates must be all inclusive and make allowance for all of the above, as well as any OH&S aspects inherent to the installation of the new manhole cover slabs.

NOTES

1. REMOVE EXISTING MANHOLE COVER SLAB INCLUDING COVER AND FRAME AND CART TO SPOIL.
2. MANHOLE COVER AND FRAME TO BE POLYMER CONCRETE AND BE LOCKABLE. MAVERICK TRADING OR SIMILAR APPROVED.
3. MAKE GOOD AND CLEAN SITE ON COMPLETION

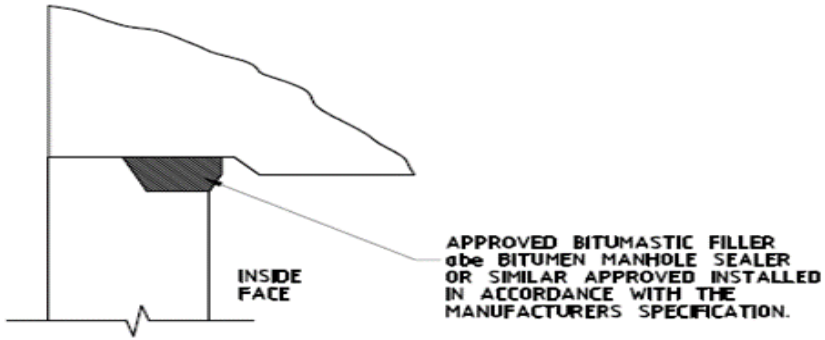

DETAIL A

SCALE 1:10

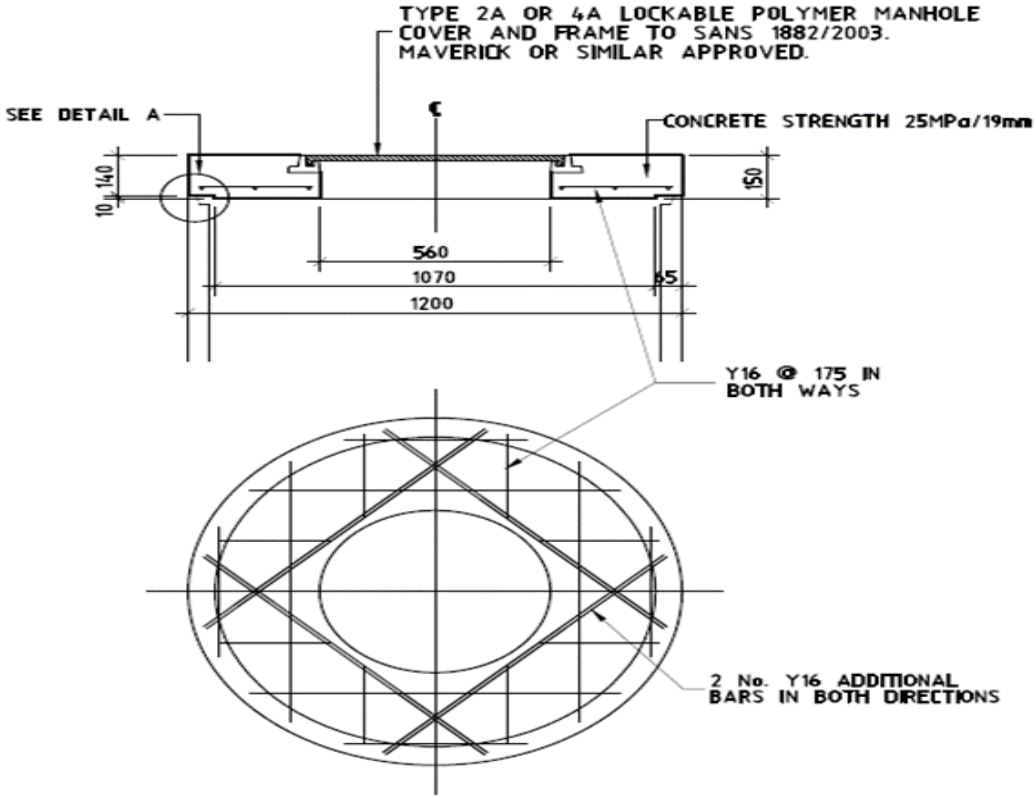

DETAIL OF COVER SLAB

SCALE 1:10

DETAILS OF REPLACEMENT SEWER MANHOLE COVER SLABS

PRICE SCHEDULE

NOTICE 80/2021

RFQ: SUPPLY, DELIVERY AND INSTALLATION OF NEW SEWER MANHOLE COVER SLABS COMPLETE WITH LOCKABLE POLYMER MANHOLE COVERS AND FRAMES

NOTE:
1. Only firm prices will be accepted. Non-firm prices will not be considered.
2. All delivery costs MUST be included in the bid price, for delivery at the prescribed destination.
3. Document MUST be completed in non-erasable black ink.
4. NO correction fluid/tape may be used.
a. In the event of a mistake having been made, it shall be crossed out in ink and be accompanied by an initial at each and every alteration.
5. The Bidder MUST indicate whether he/she/the entity is a registered VAT Vendor or not.
6. In the case of the Bidder not being a registered VAT Vendor, both columns (amount/rate excluding AND including VAT) must reflect the same amount
7. Price per unit will be used for evaluation, more units may be purchased

ITEM NO	ITEM DESCRIPTION	UNIT	BRAND NAME	LEAD TIME IN DAYS/WEEK (NOT EXCEEDING 2 WEEKS)	PRICE PER UNIT EXCL. VAT	VAT	PRICE PER UNIT INCL VAT
1	Unit Price must be inclusive of Removal of existing sewer manhole topslabs complete, and dispose to spoil site and make good site on completion. Supply, delivery and installation of new sewer manhole cover slabs complete with lockable Polymer manhole cover and frames:	-	-	-	-	-	-
1.1	Type 2A	Each					
1.2	Type 4A	Each					

FORM OF OFFER AND ACCEPTANCE - COMPULSORY
NOTICE NO: 80/2021
RFQ: SUPPLY, DELIVERY AND INSTALLATION OF NEW SEWER MANHOLE COVER SLABS COMPLETE WITH LOCKABLE POLYMER MANHOLE COVERS AND FRAMES

1. I hereby undertake to render services/goods described in the attached bidding documents to Kouga Municipality in accordance with the requirements and task directives / proposals specifications stipulated in **Bid Number: 80/2021** at the price/s quoted. My offer/s remain binding upon me and open for acceptance by the Purchaser during the validity period indicated and calculated from the closing date of the bid.

2. The following documents shall be deemed to form and be read and construed as part of this agreement:

   (i) Bidding documents, *viz*
   - Invitation to bid;
   - Tax clearance certificate / Tax compliance Status;
   - Pricing schedule(s);
   - Filled in task directive/proposal;
   - Preference claims for Broad Based Black Economic Empowerment Status Level of Contribution in terms of the Preferential Procurement Regulations 2017;
   - Declaration of interest;
   - Declaration of Bidder's past SCM practices;
   - Certificate of Independent Bid Determination;
   - Special Conditions of Contract;

   (ii) General Conditions of Contract; and

   (iii) Other (specify)

3. I confirm that I have satisfied myself as to the correctness and validity of my bid; that the price(s) and rate(s) quoted cover all the services specified in the bidding documents; that the price(s) and rate(s) cover all my obligations and I accept that any mistakes regarding price(s) and rate(s) and calculations will be at my own risk.

4. I accept full responsibility for the proper execution and fulfilment of all obligations and conditions devolving on me under this agreement as the principal liable for the due fulfillment of this contract.

5. **The offered total of the Prices for the Supply, Delivery and Installation of new sewer manhole cover slabs complete with lockable polymer manhole cover and frames to Kouga Local Municipality Inclusive of Value Added Tax is correct as quoted on page Nine (9).**

6. I declare that I have no participation in any collusive practices with any bidder or any other person regarding this or any other bid.

7. I confirm that I am duly authorized to sign this contract.

NAME (PRINT) …….

CAPACITY …….

SIGNATURE …….

NAME OF FIRM …….

DATE …….

WITNESSES

1 …….

ACCEPTANCE

TO BE COMPLETED BY THE ACCOUNTING OFFICER OF KOUGA MUNICIPALITY

By signing this part of the Form of Offer and Acceptance Kouga Municipality accepts the tender offer. This acceptance of this offer shall form an agreement between the municipality and the tenderer upon the terms and conditions contained in this document. By signing this form of offer and acceptance it constitutes a legal and binding contract between Kouga Municipality and the tenderer.

NAME (PRINT) …….

CAPACITY …….

SIGNATURE …….

WITNESSES

3 …….

DECLARATION OF INTEREST - COMPULSORY

1. No bid will be accepted from persons in the service of the state∗.

2. Any person, having a kinship with persons in the service of the state, including a blood relationship, may make an offer or offers in terms of this invitation to bid. In view of possible allegations of favouritism, should the resulting bid, or part thereof, be awarded to persons connected with or related to persons in service of the state, it is required that the bidder or their authorised representative declare their position in relation to the evaluating/adjudicating authority.

3. In order to give effect to the above, the following questionnaire must be completed and submitted with the bid.

3.1 Full Name: ……

3.2 Identity Number: ……

3.3 Position occupied in the Company (Director, trustee, shareholder) .....

3.4 Company Registration Number: ……

3.5 Tax Reference Number: ……

3.6 VAT Registration Number: ……

3.7 The names of all the directors/ trustees/shareholders member, their individual identity numbers and state employee numbers must be indicated in paragraph 4 below.

3.8 Are you presently in the service of the state∗ **YES / NO**

3.8.1 If yes, furnish particulars.....

.....

∗ MSCM Regulations: "in the service of the state" means to be –

(a) a member of –
  (i) any municipal council;
  (ii) any provincial legislature; or
  (iii) the national Assembly or the national Council of provinces;

(b) a member of the board of directors of any municipal entity;
(c) an official of any municipality or municipal entity;
(d) an employee of any national or provincial department, national or provincial public entity or constitutional institution within the meaning of the Public Finance Management Act, 1999 (Act No.1 of 1999);
(e) a member of the accounting authority of any national or provincial public entity; or
(f) an employee of Parliament or a provincial legislature.

Shareholder" means a person who owns shares in the company and is actively involved in the management of the company or business and exercises control over the company.

.....

3.9. Have you been in the service of the state for the past twelve months? **YES / NO**

3.9.1 If yes, furnish particulars.

……

……

3.10. Do you, have any relationship (family, friend, other) with persons in the service of the state and who may be involved with the evaluation and or adjudication of this bid? **YES / NO**

3.10.1 If yes, furnish particulars.

……

……

3.11 Are you, aware of any relationship (family, friend, other) between any other bidder and any persons in the service of the state who may be involved with the evaluation and or adjudication of this bid? **YES / NO**

3.11.1 If yes, furnish particulars

……..

……..

3.12 Are any of the company's directors, trustees, managers, principal shareholders or stakeholders in the service of the state? **YES / NO**

3.12.1 If yes, furnish particulars.

……

……

3.13 Are any spouse, child or parent of the company's directors, trustees, managers, principal shareholders or stakeholders in service of the state? **YES / NO**

3.13.1 If yes, furnish particulars.

……

……

3.14 Do you or any directors, trustees, managers, principal shareholders Or stakeholders of this company have any interest in other related companies or business whether or not they are bidding for this contract? **YES / NO**

3.14.1 If yes, furnish particulars.

.....

.....

.....

4. Full details of directors/ trustees/ members/ shareholders.

Full Name	**Identity Number**	**State Government Employee Number**

…….. ……..

Signature Date

…… ……

Capacity Name of Bidder

Commissioner of Oaths

PREFERENCE POINTS CLAIM FORM IN TERMS OF THE PREFERENTIAL PROCUREMENT REGULATIONS 2017 - COMPULSORY

This preference form must form part of all bids invited. It contains general information and serves as a claim form for preference points for Broad-Based Black Economic Empowerment (B-BBEE) Status Level of Contribution

NB: BEFORE COMPLETING THIS FORM, BIDDERS MUST STUDY THE GENERAL CONDITIONS, DEFINITIONS AND DIRECTIVES APPLICABLE IN RESPECT OF B-BBEE, AS PRESCRIBED IN THE PREFERENTIAL PROCUREMENT REGULATIONS, 2017.

---

1. GENERAL CONDITIONS

1.1 The following preference point systems are applicable to all bids:

- the 80/20 system for requirements with a Rand value of up to R50 000 000 (all applicable taxes included); and
- the 90/10 system for requirements with a Rand value above R50 000 000 (all applicable taxes included).

1.2

a) The value of this bid is estimated to not exceed R50 000 000 (all applicable taxes included) and therefore the 80/20 preference point system shall be applicable; or

b) Either the 80/20 or 90/10 preference point system will be applicable to this tender (*delete whichever is not applicable for this tender*).

1.3 Points for this bid shall be awarded for:

(a) Price; and

(b) B-BBEE Status Level of Contributor.

1.4 The maximum points for this bid are allocated as follows:

	POINTS
PRICE	80
B-BBEE STATUS LEVEL OF CONTRIBUTOR	20
Total points for Price and B-BBEE must not exceed	**100**

1.5 Failure on the part of a bidder to submit proof of B-BBEE Status level of contributor together with the bid, will be interpreted to mean that preference points for B-BBEE status level of contribution are not claimed.

1.6 The purchaser reserves the right to require of a bidder, either before a bid is adjudicated or at any time subsequently, to substantiate any claim in regard to preferences, in any manner required by the purchaser.

2. DEFINITIONS

(a) **"B-BBEE"** means broad-based black economic empowerment as defined in section 1 of the Broad-Based Black Economic Empowerment Act;

(b) "**B-BBEE status level of contributor"** means the B-BBEE status of an entity in terms of a code of good practice on black economic empowerment, issued in terms of section 9(1) of the Broad-Based Black Economic Empowerment Act;

(c) **"bid"** means a written offer in a prescribed or stipulated form in response to an invitation by an organ of state for the provision of goods or services, through price quotations, advertised competitive bidding processes or proposals;

(d) **"Broad-Based Black Economic Empowerment Act"** means the Broad-Based Black Economic Empowerment Act, 2003 (Act No. 53 of 2003);

(e) **"EME"** means an Exempted Micro Enterprise in terms of a code of good practice on black economic empowerment issued in terms of section 9 (1) of the Broad-Based Black Economic Empowerment Act;

(f) **"functionality"** means the ability of a tenderer to provide goods or services in accordance with specifications as set out in the tender documents.

(g) **"prices"** includes all applicable taxes less all unconditional discounts;

(h) **"proof of B-BBEE status level of contributor"** means:

1) B-BBEE Status level certificate issued by an authorized body or person;

2) A sworn affidavit as prescribed by the B-BBEE Codes of Good Practice;

3) Any other requirement prescribed in terms of the B-BBEE Act;

(i) **"QSE"** means a qualifying small business enterprise in terms of a code of good practice on black economic empowerment issued in terms of section 9 (1) of the Broad-Based Black Economic Empowerment Act;

(j) **"rand value"** means the total estimated value of a contract in Rand, calculated at the time of bid invitation, and includes all applicable taxes;

3. POINTS AWARDED FOR PRICE

3.1 THE 80/20 OR 90/10 PREFERENCE POINT SYSTEMS

A maximum of 80 or 90 points is allocated for price on the following basis:

80/20 **or** **90/10**

$$Ps = 80\left(1 - \frac{Pt - P\min}{P\min}\right) \quad \text{or} \quad Ps = 90\left(1 - \frac{Pt - P\min}{P\min}\right)$$

Where

Ps = Points scored for price of bid under consideration

Pt = Price of bid under consideration

Pmin = Price of lowest acceptable bid

4. POINTS AWARDED FOR B-BBEE STATUS LEVEL OF CONTRIBUTOR

4.1 In terms of Regulation 6 (2) and 7 (2) of the Preferential Procurement Regulations, preference points must be awarded to a bidder for attaining the B-BBEE status level of contribution in accordance with the table below:

B-BBEE Status Level of Contributor	Number of points (90/10 system)	Number of points (80/20 system)
1	10	20
2	9	18
3	6	14
4	5	12
5	4	8
6	3	6
7	2	4
8	1	2
Non-compliant contributor	0	0

5. BID DECLARATION

5.1 Bidders who claim points in respect of B-BBEE Status Level of Contribution must complete the following:

6. B-BBEE STATUS LEVEL OF CONTRIBUTOR CLAIMED IN TERMS OF PARAGRAPHS 1.4 AND 4.1

6.1 B-BBEE Status Level of Contributor: . = …… (maximum of 10 or 20 points)

(Points claimed in respect of paragraph 7.1 must be in accordance with the table reflected in paragraph 4.1 and must be substantiated by relevant proof of B-BBEE status level of contributor.

7. SUB-CONTRACTING

7.1 Will any portion of the contract be sub-contracted?

(***Tick applicable box***)

YES		NO	

7.1.1 If yes, indicate:

i) What percentage of the contract will be subcontracted.....……%
ii) The name of the sub-contractor……..
iii) The B-BBEE status level of the sub-contractor.....……..
iv) Whether the sub-contractor is an EME or QSE
(Tick applicable box)

YES		NO	

v) Specify, by ticking the appropriate box, if subcontracting with an enterprise in terms of

Preferential Procurement Regulations,2017:

Designated Group: An EME or QSE which is at last 51% owned by:	**EME** √	**QSE** √
Black people		
Black people who are youth		
Black people who are women		
Black people with disabilities		
Black people living in rural or underdeveloped areas or townships		
Cooperative owned by black people		
Black people who are military veterans		
OR		
Any EME		
Any QSE		

8. **DECLARATION WITH REGARD TO COMPANY/FIRM**

8.1 Name of company/firm: …….

8.2 VAT registration number: …….……

8.3 Company registration number: …….…….…….

8.4 TYPE OF COMPANY/ FIRM

- ☐ Partnership/Joint Venture / Consortium
- ☐ One person business/sole propriety
- ☐ Close corporation
- ☐ Company
- ☐ (Pty) Limited

[TICK APPLICABLE BOX]

8.5 DESCRIBE PRINCIPAL BUSINESS ACTIVITIES

……
……
……
……..

8.6 COMPANY CLASSIFICATION

- ☐ Manufacturer
- ☐ Supplier
- ☐ Professional service provider
- ☐ Other service providers, e.g. transporter, etc.

[*TICK APPLICABLE BOX*]

8.7 MUNICIPAL INFORMATION

Municipality where business is situated: ……

Registered Account Number: ……

Stand Number: ……

8.8 Total number of years the company/firm has been in business: ……

8.9 I/we, the undersigned, who is / are duly authorised to do so on behalf of the company/firm, certify that the points claimed, based on the B-BBE status level of contributor indicated in paragraphs 1.4 and 6.1 of the foregoing certificate, qualifies the company/ firm for the preference(s) shown and I / we acknowledge that:

i) The information furnished is true and correct;

ii) The preference points claimed are in accordance with the General Conditions as indicated in paragraph 1 of this form;

iii) In the event of a contract being awarded as a result of points claimed as shown in paragraphs 1.4 and 6.1, the contractor may be required to furnish documentary proof to the satisfaction of the purchaser that the claims are correct;

iv) If the B-BBEE status level of contributor has been claimed or obtained on a fraudulent basis or any of the conditions of contract have not been fulfilled, the purchaser may, in addition to any other remedy it may have –

(a) disqualify the person from the bidding process;

(b) recover costs, losses or damages it has incurred or suffered as a result of that person's conduct;

(c) cancel the contract and claim any damages which it has suffered as a result of having to make less favourable arrangements due to such cancellation;

(d) recommend that the bidder or contractor, its shareholders and directors, or only the shareholders and directors who acted on a fraudulent basis, be restricted by the National Treasury from obtaining business from any organ of state for a period not exceeding 10 years, after the *audi alteram partem* (hear the other side) rule has been applied; and

(e) forward the matter for criminal prosecution.

WITNESSES 1. …….. 2. ……	…… SIGNATURE(S) OF BIDDERS(S) DATE: ……..

Compulsory Format for Sworn Affidavit for Exempted Micro Enterprise

I, the undersigned,

Full name & Surname	
Identity number	

Hereby declare under oath as follows:

1. The contents of this statement are to the best of my knowledge a true reflection of the facts.

2. I am a Member / Director / Owner of the following enterprise and am duly authorised to act on its behalf:

Enterprise Name:	
Trading Name (If Applicable):	
Registration Number:	
Enterprise Physical Address:	
Type of Entity (CC, (Pty) Ltd, Sole Prop etc.):	
Nature of Business:	
Definition of "Black People"	As per the Broad-Based Black Economic Empowerment Act 53 of 2003 as Amended by Act No 46 of 2013 "Black People" is a generic term which means Africans, Coloureds and Indians – (a) who are citizens of the Republic of South Africa by birth or descent; or (b) who became citizens of the Republic of South Africa by naturalisationi. before 27 April 1994; or ii. on or after 27 April 1994 and who would have been entitled to acquire citizenship by naturalization prior to that date;"
Definition of "Black Designated Groups"	"Black Designated Groups means: (a) unemployed black people not attending and not required by law to attend an educational institution and not awaiting admission to an educational institution; (b) Black people who are youth as defined in the National Youth Commission Act of 1996; (c) Black people who are persons with disabilities as defined in the Code of Good Practice on employment of people with disabilities issued under the Employment Equity Act; (d) Black people living in rural and under developed areas; (e) Black military veterans who qualifies to be called a military veteran in terms of the Military Veterans Act 18 of 2011;"

3. I hereby declare under Oath that:

• The Enterprise is _____% Black Owned as per Amended Code Series 100 of the Amended Codes of Good Practice issued under section 9 (1) of B-BBEE Act No 53 of 2003 as Amended by Act No 46 of 2013,

• The Enterprise is _____% Black Female Owned as per Amended Code Series 100 of the Amended Codes of Good Practice issued under section 9 (1) of B-BBEE Act No 53 of 2003 as Amended by Act No 46 of 2013,

• The Enterprise is _____% Black Designated Group Owned as per Amended Code Series 100 of the Amended Codes of Good Practice issued under section 9 (1) of B-BBEE Act No 53 of 2003 as Amended by Act No 46 of 2013,

• Black Designated Group Owned % Breakdown as per the definition stated above:

- Black Youth % = _____%
- Black Disabled % =_____%
- Black Unemployed % =_____%
- Black People living in Rural areas % = _____%
- Black Military Veterans % =_____%

• Based on the Financial Statements/Management Accounts and other information available on the latest financial year-end of _____, the annual Total Revenue was between R10,000,000.00 (Ten Million Rands) and R50,000,000.00 (Fifty Million Rands),

• Please confirm on the table below the B-BBEE level contributor, **by ticking the applicable box.**

100% Black Owned	**Level One** (135% B-BBEE procurement recognition level)	
At Least 51% black owned	**Level Two** (125% B-BBEE procurement recognition level)	
Less than 51% Black Owned	**Level Four** (100% B-BBEE procurement recognition level)	

4. I know and understand the contents of this affidavit and I have no objection to take the prescribed oath and consider the oath binding on my conscience and on the owners of the enterprise which I represent in this matter.

5. The sworn affidavit will be valid for a period of 12 months from the date signed by commissioner.

Deponent Signature: _____

Date: _____

_____

Commissioner of Oaths
Signature & stamp

Compulsory Format for Sworn Affidavit for Qualifying Small Enterprises

I, the undersigned,

Full name & Surname	
Identity number	

Hereby declare under oath as follows:

1. The contents of this statement are to the best of my knowledge a true reflection of the facts.

2. I am a Member / Director / Owner of the following enterprise and am duly authorised to act on its behalf:

Enterprise Name:	
Trading Name (If Applicable):	
Registration Number:	
Enterprise Physical Address:	
Type of Entity (CC, (Pty) Ltd, Sole Prop etc.):	
Nature of Business:	
Definition of "Black People"	As per the Broad-Based Black Economic Empowerment Act 53 of 2003 as Amended by Act No 46 of 2013 "Black People" is a generic term which means Africans, Coloureds and Indians – (a) who are citizens of the Republic of South Africa by birth or descent; or (b) who became citizens of the Republic of South Africa by naturalisationi. before 27 April 1994; or ii. on or after 27 April 1994 and who would have been entitled to acquire citizenship by naturalization prior to that date;"
Definition of "Black Designated Groups"	"Black Designated Groups means: (a) unemployed black people not attending and not required by law to attend an educational institution and not awaiting admission to an educational institution; (b) Black people who are youth as defined in the National Youth Commission Act of 1996; (c) Black people who are persons with disabilities as defined in the Code of Good Practice on employment of people with disabilities issued under the Employment Equity Act; (d) Black people living in rural and under developed areas; (e) Black military veterans who qualifies to be called a military veteran in terms of the Military Veterans Act 18 of 2011;"

3. I hereby declare under Oath that:

• The Enterprise is _____% Black Owned as per Amended Code Series 100 of the Amended Codes of Good Practice issued under section 9 (1) of B-BBEE Act No 53 of 2003 as Amended by Act No 46 of 2013,

• The Enterprise is _____% Black Female Owned as per Amended Code Series 100 of the Amended Codes of Good Practice issued under section 9 (1) of B-BBEE Act No 53 of 2003 as Amended by Act No 46 of 2013,

• The Enterprise is _____% Black Designated Group Owned as per Amended Code Series 100 of the Amended Codes of Good Practice issued under section 9 (1) of B-BBEE Act No 53 of 2003 as Amended by Act No 46 of 2013,

• Black Designated Group Owned % Breakdown as per the definition stated above:

- Black Youth % = _____%
- Black Disabled % =_____%
- Black Unemployed % =_____%
- Black People living in Rural areas % = _____%
- Black Military Veterans % =_____%

• Based on the Financial Statements/Management Accounts and other information available on the latest financial year-end of _____, the annual Total Revenue was between R10,000,000.00 (Ten Million Rands) and R50,000,000.00 (Fifty Million Rands),

• Please confirm on the table below the B-BBEE level contributor, **by ticking the applicable box.**

100% Black Owned	**Level One** (135% B-BBEE procurement recognition level)	
At Least 51% black owned	**Level Two** (125% B-BBEE procurement recognition level)	
Less than 51% Black Owned	**Level Four** (100% B-BBEE procurement recognition level)	

4. I know and understand the contents of this affidavit and I have no objection to take the prescribed oath and consider the oath binding on my conscience and on the owners of the enterprise which I represent in this matter.

5. The sworn affidavit will be valid for a period of 12 months from the date signed by commissioner.

Deponent Signature: _____

Date: _____

_____

Commissioner of Oaths
Signature & stamp

DECLARATION CERTIFICATE FOR LOCAL PRODUCTION AND CONTENT FOR DESIGNATED SECTORS – COMPULSORY

This Municipal Bidding Document (MBD) must form part of all bids invited. It contains general information and serves as a declaration form for local content (local production and local content are used interchangeably).

Before completing this declaration, bidders must study the General Conditions, Definitions, Directives applicable in respect of Local Content as prescribed in the Preferential Procurement Regulations, 2017, the South African Bureau of Standards (SABS) approved technical specification number SATS 1286:2011 (Edition 1) and the Guidance on the Calculation of Local Content together with the Local Content Declaration Templates [Annex C (Local Content Declaration: Summary Schedule), D (Imported Content Declaration: Supporting Schedule to Annex C) and E (Local Content Declaration: Supporting Schedule to Annex C)].

2. General Conditions

2.1. Preferential Procurement Regulations, 2017 (Regulation 8) make provision for the promotion of local production and content.

2.2. Regulation 8.(2) prescribes that in the case of designated sectors, organs of state must advertise such tenders with the specific bidding condition that only locally produced or manufactured goods, with a stipulated minimum threshold for local production and content will be considered.

2.3. Where necessary, for tenders referred to in paragraph 1.2 above, a two stage bidding process may be followed, where the first stage involves a minimum threshold for local production and content and the second stage price and B-BBEE.

2.4. A person awarded a contract in relation to a designated sector, may not sub-contract in such a manner that the local production and content of the overall value of the contract is reduced to below the stipulated minimum threshold.

2.5. The local content (LC) expressed as a percentage of the bid price must be calculated in accordance with the SABS approved technical specification number SATS 1286: 2011 as follows:

$$LC = [1 - x / y] * 100$$

Where

x is the imported content in Rand

y is the bid price in Rand excluding value added tax (VAT)

Prices referred to in the determination of x must be converted to Rand (ZAR) by using the exchange rate published by South African Reserve Bank (SARB) at 12:00 on the date of advertisement of the bid as indicated in paragraph 4.1 below.

The SABS approved technical specification number SATS 1286:2011 is accessible on http:/www.thedti.gov.za/industrial development/ip.jsp at no cost.

2.6. A bid may be disqualified if this Declaration Certificate and the Annex C (Local Content Declaration: Summary Schedule) are not submitted as part of the bid documentation;

3. The stipulated minimum threshold(s) for local production and content (refer to Annex A of SATS 1286:2011) for this bid is/are as follows:

4. The stipulated minimum threshold(s) for local production and content (refer to Annex A of SATS 1286:2011) for this bid is/are as follows:

Description of services, works or goods	Stipulated minimum threshold
_____	_____%
_____	_____%
_____	_____%

3. Does any portion of the goods or services offered

have any imported content?

(***Tick applicable box***)

YES		NO	

3.1 If yes, the rate(s) of exchange to be used in this bid to calculate the local content as prescribed in paragraph 1.5 of the general conditions must be the rate(s) published by SARB for the specific currency at 12:00 on the date of advertisement of the bid.

The relevant rates of exchange information is accessible on www.reservebank.co.za

Indicate the rate(s) of exchange against the appropriate currency in the table below (refer to Annex A of SATS 1286:2011):

Currency	**Rates of exchange**
US Dollar	
Pound Sterling	
Euro	
Yen	
Other	

NB: Bidders must submit proof of the SARB rate (s) of exchange used.

4. Where, after the award of a bid, challenges are experienced in meeting the stipulated minimum threshold for local content the dti must be informed accordingly in order for the dti to verify and in consultation with the AO/AA provide directives in this regard.

LOCAL CONTENT DECLARATION – COMPULSORY

(REFER TO ANNEX B OF SATS 1286:2011)

LOCAL CONTENT DECLARATION BY CHIEF FINANCIAL OFFICER OR OTHER LEGALLY RESPONSIBLE PERSON NOMINATED IN WRITING BY THE CHIEF EXECUTIVE OR SENIOR MEMBER/PERSON WITH MANAGEMENT RESPONSIBILITY (CLOSE CORPORATION, PARTNERSHIP OR INDIVIDUAL)

IN RESPECT OF BID NO. .....

ISSUED BY: (Procurement Authority / Name of Institution):
.....

NB

1 The obligation to complete, duly sign and submit this declaration cannot be transferred to an external authorized representative, auditor or any other third party acting on behalf of the bidder.

2 Guidance on the Calculation of Local Content together with Local Content Declaration Templates (Annex C, D and E) is accessible on http://www.thdti.gov.za/industrial development/ip.jsp. Bidders should first complete Declaration D. After completing Declaration D, bidders should complete Declaration E and then consolidate the information on Declaration C. **Declaration C should be submitted with the bid documentation at the closing date and time of the bid in order to substantiate the declaration made in paragraph (c) below.** Declarations D and E should be kept by the bidders for verification purposes for a period of at least 5 years. The successful bidder is required to continuously update Declarations C, D and E with the actual values for the duration of the contract.

I, the undersigned, ……..... (full names),

do hereby declare, in my capacity as …… ……..

of .....(name of bidder entity), the following:

(a) The facts contained herein are within my own personal knowledge.

(b) I have satisfied myself that:

(i) the goods/services/works to be delivered in terms of the above-specified bid comply with the minimum local content requirements as specified in the bid, and as measured in terms of SATS 1286:2011; and

(c) The local content percentage (%) indicated below has been calculated using the formula given in clause 3 of SATS 1286:2011, the rates of exchange indicated in

paragraph 4.1 above and the information contained in Declaration D and E which has been consolidated in Declaration C:

Bid price, excluding VAT (y)	R
Imported content (x), as calculated in terms of SATS 1286:2011	R
Stipulated minimum threshold for local content (paragraph 3 above)	
Local content %, as calculated in terms of SATS 1286:2011	

If the bid is for more than one product, the local content percentages for each product contained in Declaration C shall be used instead of the table above.

The local content percentages for each product has been calculated using the formula given in clause 3 of SATS 1286:2011, the rates of exchange indicated in paragraph 4.1 above and the information contained in Declaration D and E.

(d) I accept that the Procurement Authority / Institution has the right to request that the local content be verified in terms of the requirements of SATS 1286:2011.

(e) I understand that the awarding of the bid is dependent on the accuracy of the information furnished in this application. I also understand that the submission of incorrect data, or data that are not verifiable as described in SATS 1286:2011, may result in the Procurement Authority / Institution imposing any or all of the remedies as provided for in Regulation 14 of the Preferential Procurement Regulations, 2017 promulgated under the Preferential Policy Framework Act (PPPFA), 2000 (Act No. 5 of 2000).

SIGNATURE: _____ **DATE:** _____

WITNESS No. 1 _____ **DATE:** _____

WITNESS No. 2 _____ **DATE:** _____

Additional: If bidder requires an authorisation letter from **The DTI** please do so timeously. The following people can be contacted at The DTI:

Patricia Khumalo: Tel: 012 394 1390, email: khumalop@thedyi.gov.za
Jaywant Irkhede: Tel; 012 394 5166, email: jirkhede@thedti.gov.za

Annex C

Local Content Declaration - Summary Schedule

(C1)	Tender No.
(C2)	Tender description:
(C3)	Designated product(s)
(C4)	Tender Authority:
(C5)	Tendering Entity name:
(C6)	Tender Exchange Rate:
(C7)	Specified local content %

Pula EU GBP

Note: VAT to be excluded from all calculations

Calculation of local content								Tender summary			
Tender item no's	List of items	Tender price - each (excl VAT)	Exempted imported value	Tender value net of exempted imported content	Imported value	Local value	Local content % (per item)	Tender Qty	Total tender value	Total exempted imported content	Total Imported content
(C8)	(C9)	(C10)	(C11)	(C12)	(C13)	(C14)	(C15)	(C16)	(C17)	(C18)	(C19)

(C20) Total tender value	R 0
(C21) Total Exempt imported content	R 0
(C22) *Total* Tender value net of exempt imported content	R 0
(C23) Total Imported content	R 0
(C24) Total local content	R 0
(C25) Average local content % of tender	

Signature of tenderer from Annex B

Date:

Annex D

Imported Content Declaration - Supporting Schedule to Annex C

(D1)	Tender No.	
(D2)	Tender description:	
(D3)	Designated Products:	
(D4)	Tender Authority:	
(D5)	Tendering Entity name:	
(D6)	Tender Exchange Rate:	Pula

EU R 9.00 GBP R 12.00

Note: VAT to be excluded from all calculations

A. Exempted imported content

Tender item no's	Description of imported content	Local supplier	Overseas Supplier	Calculation of imported content: Forign currency value as per Commercial Invoice	Tender Exchange Rate	Local value of imports	Freight costs to port of entry	All locally incurred landing costs & duties	Total landed cost excl VAT	Summary: Tender Qty	Exempted imported value
(D7)	(D8)	(D9)	(D10)	(D11)	(D12)	(D13)	(D14)	(D15)	(D16)	(D17)	(D18)

(D19) Total exempt imported value R 0

This total must correspond with Annex C - C 21

B. Imported directly by the Tenderer

Tender item no's	Description of imported content	Unit of measure	Overseas Supplier	Calculation of imported content: Forign currency value as per Commercial Invoice	Tender Rate of Exchange	Local value of imports	Freight costs to port of entry	All locally incurred landing costs & duties	Total landed cost excl VAT	Summary: Tender Qty	Total imported value
(D20)	(D21)	(D22)	(D23)	(D24)	(D25)	(D26)	(D27)	(D28)	(D29)	(D30)	(D31)

(D32) Total imported value by tenderer R 0

SATS 1286.2011

Annex E

Local Content Declaration - Supporting Schedule to Annex C

(E1)	**Tender No.**	
(E2)	**Tender description:**	
(E3)	**Designated products:**	
(E4)	**Tender Authority:**	
(E5)	**Tendering Entity name:**	

Note: VAT to be excluded from all calculations

Local Products (Goods, Services and Works)	Description of items purchased	Local suppliers	Value
	(E6)	*(E7)*	*(E8)*
		***(E9)* Total local products (Goods, Services and Works)**	

(E10)	**Manpower costs**	(Tenderer's manpower cost)	
(E11)	**Factory overheads**	(Rental, depreciation & amortisation, utility costs, consumables etc.)	
(E12)	**Administration overheads and mark-up**	(Marketing, insurance, financing, interest etc.)	

***(E13)* Total local content**

This total must correspond with Annex C - C24

Signature of tenderer from Annex B

Date:

KOUGA MUNICIPALITY

Please refer to instruction on Page 3 of the terms of reference document.

AUTHORITY FOR SIGNATORY

Companies submitting tenders must provide evidence that the person who signed the tender document has authority to do so, by attaching a copy of the relevant resolution of the Board of Directors, duly signed and dated, to this form. Alternatively this form may be completed by competent authority.

By resolution of the Board of Directors at a meeting held on ……..

Mr/Ms ……..

Has been duly authorised to sign all documents in connection with this Tender on behalf of:

……

……

……

SIGNED OF BEHALF OF COMPANY:…….....

IN HIS CAPACITY AS: ……

SIGNATURE OF SIGNATORY:……

COMPANY STAMP:

MBD 9

CERTIFICATE OF INDEPENDENT BID DETERMINATION - COMPULSORY

1 This Municipal Bidding Document (MBD) must form part of all bids[1] invited.

2 Section 4 (1) (b) (iii) of the Competition Act No. 89 of 1998, as amended, prohibits an agreement between, or concerted practice by, firms, or a decision by an association of firms, if it is between parties in a horizontal relationship and if it involves collusive bidding (or bid rigging).[2] Collusive bidding is a *pe se* prohibition meaning that it cannot be justified under any grounds.

3 Municipal Supply Regulation 38 (1) prescribes that a supply chain management policy must provide measures for the combating of abuse of the supply chain management system, and must enable the accounting officer, among others, to:
a. take all reasonable steps to prevent such abuse;
b. reject the bid of any bidder if that bidder or any of its directors has abused the supply chain management system of the municipality or municipal entity or has committed any improper conduct in relation to such system; and
c. cancel a contract awarded to a person if the person committed any corrupt or fraudulent act during the bidding process or the execution of the contract.

4 This MBD serves as a certificate of declaration that would be used by institutions to ensure that, when bids are considered, reasonable steps are taken to prevent any form of bid-rigging.

5 In order to give effect to the above, the attached Certificate of Bid Determination (MBD9) must be completed and submitted with the bid:

[1] Includes price quotations, advertised competitive bids, limited bids and proposals.
[2] Bid rigging (or collusive bidding) occurs when businesses, that would otherwise be expected to compete, secretly conspire to raise prices or lower the quality of goods and / or services for purchasers who wish to acquire goods and / or services through a bidding process. Bid rigging is, therefore, an agreement between competitors not to compete.

CERTIFICATE OF INDEPENDENT BID DETERMINATION - COMPULSORY

I, the undersigned, in submitting the accompanying bid:

NOTICE NO: 80 OF 2021:
RFQ: SUPPLY, DELIVERY AND INSTALLATION OF NEW SEWER MANHOLE COVER SLABS COMPLETE WITH LOCKABLE POLYMER MANHOLE COVERS AND FRAMES

in response to the invitation for the bid made by: **Kouga Local Municipality** do hereby make the following statements that I certify to be true and complete in every respect:

I certify, on behalf of :_____that:
(Name of Bidder)

1. I have read and I understand the contents of this Certificate;

2. I understand that the accompanying bid will be disqualified if this Certificate is found not to be true and complete in every respect;

3. I am authorized by the bidder to sign this Certificate, and to submit the accompanying bid, on behalf of the bidder;

4. Each person whose signature appears on the accompanying bid has been authorized by the bidder to determine the terms of, and to sign, the bid, on behalf of the bidder;

5. For the purposes of this Certificate and the accompanying bid, I understand that the word "competitor" shall include any individual or organization, other than the bidder, whether or not affiliated with the bidder, who:
(a) has been requested to submit a bid in response to this bid invitation;
(b) could potentially submit a bid in response to this bid invitation, based on their qualifications, abilities or experience; and
(c) provides the same goods and services as the bidder and/or is in the same line of business as the bidder

6. The bidder has arrived at the accompanying bid independently from, and without consultation, communication, agreement or arrangement with any competitor. However communication between partners in a joint venture or consortium[3] will not be construed as collusive bidding.

7. In particular, without limiting the generality of paragraphs 6 above, there has been no consultation, communication, agreement or arrangement with any competitor regarding:
(a) prices;
(b) geographical area where product or service will be rendered (market allocation)
(c) methods, factors or formulas used to calculate prices;
(d) the intention or decision to submit or not to submit, a bid;
(e) the submission of a bid which does not meet the specifications and conditions of the bid; or
(f) bidding with the intention not to win the bid.
8. In addition, there have been no consultations, communications, agreements or arrangements with any competitor regarding the quality, quantity, specifications and conditions or delivery particulars of the products or services to which this bid invitation relates.

9. The terms of the accompanying bid have not been, and will not be, disclosed by the bidder, directly or indirectly, to any competitor, prior to the date and time of the official bid opening or of the awarding of the contract.

10. I am aware that, in addition and without prejudice to any other remedy provided to combat any restrictive practices related to bids and contracts, bids that are suspicious will be reported to the Competition Commission for investigation and possible imposition of administrative penalties in terms of section 59 of the Competition Act No. 89 of 1998 and or may be reported to the National Prosecuting Authority (NPA) for criminal investigation and or may be restricted from conducting business with the public sector for a period not exceeding ten (10) years in terms of the Prevention and Combating of Corrupt Activities Act No. 12 of 2004 or any other applicable legislation.

……	……
Signature	Date
……	……
Position	Name of Bidder

[3] Joint venture or Consortium means an association of persons for the purpose of combining their expertise, property, capital, efforts, skill and knowledge in an activity for the execution of a contract.

DECLARATION OF BIDDER'S PAST SUPPLY CHAIN MANAGEMENT PRACTICES - COMPULSORY

1 This Municipal Bidding Document must form part of all bids invited.

2 It serves as a declaration to be used by municipalities and municipal entities in ensuring that when goods and services are being procured, all reasonable steps are taken to combat the abuse of the supply chain management system.

3 The bid of any bidder may be rejected if that bidder, or any of its directors have:

a. abused the municipality's / municipal entity's supply chain management system or committed any improper conduct in relation to such system;
b. been convicted for fraud or corruption during the past five years;
c. willfully neglected, reneged on or failed to comply with any government, municipal or other public sector contract during the past five years; or
d. been listed in the Register for Tender Defaulters in terms of section 29 of the Prevention and Combating of Corrupt Activities Act (No 12 of 2004).

4 In order to give effect to the above, the following questionnaire must be completed and submitted with the bid.

Item	Question	Yes	No
4.1	Is the bidder or any of its directors listed on the National Treasury's Database of Restricted Suppliers as companies or persons prohibited from doing business with the public sector? (Companies or persons who are listed on this Database were informed in writing of this restriction by the Accounting Officer/Authority of the institution that imposed the restriction after the *audi alteram partem* rule was applied). **The Database of Restricted Suppliers now resides on the National Treasury's website(**www.treasury.gov.za**) and can be accessed by clicking on its link at the bottom of the home page.**	Yes ☐	No ☐
4.1.1	If so, furnish particulars:		
4.2	Is the bidder or any of its directors listed on the Register for Tender Defaulters in terms of section 29 of the Prevention and Combating of Corrupt Activities Act (No 12 of 2004)? **The Register for Tender Defaulters can be accessed on the National Treasury's website (www.treasury.gov.za) by clicking on its link at the bottom of the home page.**	Yes ☐	No ☐

4.2.1	If so, furnish particulars:		
4.3	Was the bidder or any of its directors convicted by a court of law (including a court of law outside the Republic of South Africa) for fraud or corruption during the past five years?	Yes ☐	No ☐
4.3.1	If so, furnish particulars:		
Item	**Question**	**Yes**	**No**
4.4	Does the bidder or any of its directors owe any municipal rates and taxes or municipal charges to the municipality / municipal entity, or to any other municipality / municipal entity, that is in arrears for more than three months?	Yes ☐	No ☐
4.4.1	If so, furnish particulars:		
4.5	Was any contract between the bidder and the municipality / municipal entity or any other organ of state terminated during the past five years on account of failure to perform on or comply with the contract?	Yes ☐	No ☐
4.5.1	If so, furnish particulars:		

CERTIFICATION

I, THE UNDERSIGNED (FULL NAME) ……..……..……

CERTIFY THAT THE INFORMATION FURNISHED ON THIS DECLARATION FORM TRUE AND CORRECT.

I ACCEPT THAT, IN ADDITION TO CANCELLATION OF A CONTRACT, ACTION MAY BE TAKEN AGAINST ME SHOULD THIS DECLARATION PROVE TO BE FALSE.

……... **……..**

Signature **Date**

……. **……..**

Position **Name of Bidder**

KOUGA MUNICIPALITY

CERTIFICATE FOR PAYMENT OF MUNICIPAL SERVICES

DECLARATION IN TERMS OF CLAUSE 112(1) OF THE MUNICIPAL FINANCE MANAGEMENT ACT (NO.56 OF 2003) - (To be signed in the presence of a Commissioner of Oaths)

I, _____, _____ (full name and ID no.), hereby acknowledge that according to SCM Regulation 38(1)(d)(i), the Municipality may reject the tender of the tenderer if any municipal rates and taxes or municipal service charges owed by the Tenderer or any of its directors/members/partners to the Kouga Municipality, or to any other municipality or municipal entity, are in arrears for more than 3 (three) months.

I declare that I am duly authorised to act on behalf of _____ (name of the firm) and hereby declare, that to the best of my personal knowledge, neither the firm nor any director/member/partner of said firm is in arrears on any of its municipal accounts with any municipality in the Republic of South Africa, for a period longer than 3 (three) months.

I further hereby certify that the information set out in this schedule and/or attachment(s) hereto is true and correct. The Tenderer acknowledges that failure to properly and truthfully complete this schedule may result in the tender being disqualified, and/or in the event that the tenderer is successful, the cancellation of the contract.

PHYSICAL BUSINESS ADDRESS(ES) OF THE TENDERER	MUNICIPAL ACCOUNT NUMBER

FURTHER DETAILS OF THE BIDDER'S Director / Shareholder / Partners, etc.:

Director / Shareholder / partner	Physical address of the Business	Municipal Account number(s)	Physical residential address of the Director / shareholder / partner	Municipal Account number(s)

If the entity. rents/leases premises, a copy of the rental/lease agreement must be submitted with this tender. Please refer Instruction sheet of this document

Signature	**Position**	**Date**

COMMISSIONER OF OATHS Signed and sworn to before me at _____, on this _____day of _____ 20___ by the Deponent, who has acknowledged that he/she knows and understands the contents of this Affidavit, it is true and correct to the best of his/her knowledge and that he/she has no objection to taking the prescribed oath, and that the prescribed oath will be binding on his/her conscience. **COMMISSIONER OF OATHS:-** Position: _____ Address: _____ Tel: _____	**Apply official stamp of authority on this page:**

KOUGA MUNICIPALITY
NOTICE NUMBER: 80/2021
RFQ: SUPPLY, DELIVERY AND INSTALLATION OF NEW SEWER MANHOLE COVER SLABS COMPLETE WITH LOCKABLE POLYMER MANHOLE COVERS AND FRAMES

SCHEDULE OF WORK CARRIED OUT BY THE TENDERER

The Tenderer shall list below the contracts undertaken by him during the past five (5) years, or present / ongoing contracts with contactable references

Employer (Contact Person)	**Description of Project**	**Contact Telephone & E-mail**	**Value of Work Including of VAT**	**Date of completion**

SIGNED OF BEHALF OF THE TENDERER: .....

KOUGA MUNICIPALITY SUPPLIER DATABASE INFORMATION – PLEASE COMPLETE IF NOT UPDATED OR LISTED ON MUNICIPAL SUPPLIER DATABASE

1. BUSINESS PARTICULARS:

1.1 Name of Business as registered with the Registrar of Companies / Close Corporations (Legal Name)

……

1.2 Name of business used for TRADING purposes, if different form 1.1 or name of business if business is not registered with the registrar (Trading Name)

……

1.3 Registration Number as registered with the Registrar of companies / close corporations (if applicable) **OR** identity number if sole proprietor

……

1.4 Postal Address

……

……

……

Postal Code: ……..

Physical Address

…….

…….

…….

Postal Code:…….

Telephone Number: (…….) …….. Fax No: (…….) ……..……

E-mail Address

…….

1.5 Contact Person for database and tenders

Contact name: ……...

Cell Number: …….

Email address: ……

Telephone: (……..) ……

2. BANKING DETAILS - An original (signed and stamped) bank letter from the bank not older than three months, or an original cancelled cheque must be supplied. Also the account holder must match the trading name of the organization.

2.1 Name of banking institution: …….

2.2 Branch Name: ……

2.3 Branch Code: ……

2.4 Town / City: …….

2.5 Banking account number: ……

2.6 Account type: ……

2.7 Account Holder (Name under which account is operated)

……

3. COMMODITIES AND SERVICE PROVIDED

In order to identify your organization as a potential service provider, types of commodities or services rendered have to be classified.

SECTOR CODE	**SECTOR**	**PLEASE TICK (√)**
SCM1	Agriculture	
SCM2	Mining and Quarrying	
SCM3	Manufacturing	
SCM4	Construction	
SCM5	Retail and Motor Trade	
SCM6	Catering, Accommodation	
SCM7	Transport and Storage	
SCM8	Finance and Business services	
SCM9	Repair /allied Services	
SCM10	Communications	
SCM11	Other trade	
SCM12	Community and Social Services	
SCM13	Personnel Services	

Please specify the appropriate commodity or service that your organization provides as well as the area of supply.

SERVICE	**AREA WHERE SERVICE CAN BE RENDERED**

*IF MORE SPACE IS NEEDED TO SPECIFY SERVICES PLEASE ADD A PAGE

PRODUCTS	**AREA WHERE PRODUCTS CAN BE SOLD**

*IF MORE SPACE IS NEEDED TO SPECIFY SERVICES PLEASE ADD A PAGE

4. CERTIFICATION OF CORRECTNESS OF INFORMATION SUPPLIED IN THIS DOCUMENT

I / WE, THE UNDERSIGNED, WHO WARRANTS THAT HE/SHE IS DULY AUTHORISED TO DO SO ON BEHALF OF THE SUPPLIER, CERTIFIES THAT THE INFOMRATION SUPPLIED IN TERMS OF THIS DOCUMENT INCLUDING THE ANNEXURE/S WITH ADDITIONAL INFORMATION, IS CORRECT AND ACCURATE AND ACKOWLEDGES THAT:

1. The supplier will be required to furnish documentary proof of the claims, if requested to do so.

2. If the information supplied is found to be incorrect then the KLM may, in addition to any remedies it may have:

   (i) Disqualify the supplier/ contractor for a particular tender/contract/project it may be considered for, or which had been awarded to the supplier / contractor;

   (ii) Recover form the supplier / contractor all costs, losses or damages incurred or sustained by the KLM as a result of breach of the contract;

   (iii) Cancel the contract and claim any damages which the KLM may suffer by having to make less favourable arrangements after such cancellation; and /or

   (iv) De-register the supplier registered on the Supplier Database.

SIGNED ON THIS ……. DAY OF …….. 20…… AT …….

……. **……**

SIGNATURE OF AUTHORISED REPRESENTATIVE **NAME IN BLOCK LETTERS**

……

IN HIS/HER CAPACITY AS

ON BEHALF OF THE (SUPPLIER'S NAME) …….

5. DECLARATION OF INTEREST

1. No application will be accepted from persons in the service of the state∗.

5. Any person, having a kinship with persons in the service of the state, including a blood relationship, may submit a database application. In view of possible allegations of favouritism, should the resulting registration, award to persons connected with or related to persons in service of the state, it is required that the bidder or their authorised representative declare their position in relation to the evaluating/adjudicating authority.

6. In order to give effect to the above, the following questionnaire must be completed and submitted with the bid.

3.1 Full Name: ……

3.2 Identity Number: ……

3.3 Position occupied in the Company (Director, trustee, shareholder).....

3.4 Company Registration Number: ……

3.6 Tax Reference Number: ……

3.6 VAT Registration Number: ……

3.7 The names of all the directors/ trustees/shareholders member, their individual identity numbers
and state employee numbers must be indicated in paragraph 4 below.

3.8 Are you presently in the service of the state∗ **YES / NO**

∗ MSCM Regulations: "in the service of the state" means to be –

(g) a member of –
  (i) any municipal council;
  (ii) any provincial legislature; or
  (iii) the national Assembly or the national Council of provinces;

(h) a member of the board of directors of any municipal entity;
(i) an official of any municipality or municipal entity;
(j) an employee of any national or provincial department, national or provincial public entity or constitutional institution within the meaning of the Public Finance Management Act, 1999 (Act No.1 of 1999);
(k) a member of the accounting authority of any national or provincial public entity; or
(l) an employee of Parliament or a provincial legislature.

Shareholder" means a person who owns shares in the company and is actively involved in the management of the company or business and exercises control over the company.

3.8.1 If yes, furnish particulars

.....

.....

3.9. Have you been in the service of the state for the past twelve months? **YES / NO**

3.9.1 If yes, furnish particulars.

……

……

3.10. Do you, have any relationship (family, friend, other) with persons in the service of the state and who may be involved with the evaluation and or adjudication of this bid?

YES / NO

3.10.1 If yes, furnish particulars.

……

……

3.11 Are you, aware of any relationship (family, friend, other) between any other bidder and any persons in the service of the state who may be involved with the evaluation and or adjudication of this bid?

YES / NO

3.11.1 If yes, furnish particulars

…….

…….

3.12 Are any of the company's directors, trustees, managers, principal shareholders or stakeholders in the service of the state? **YES / NO**

3.12.1 If yes, furnish particulars.

……

……

3.15 Are any spouse, child or parent of the company's directors, trustees, managers, principal shareholders or stakeholders in service of the state? **YES / NO**

3.13.1 If yes, furnish particulars.

……

……

3.16 Do you or any directors, trustees, managers, principal shareholders Or stakeholders of this company have any interest in other related companies or business whether or not they are bidding for this contract? **YES / NO**

3.14.1 If yes, furnish particulars.

.....

.....

4. Full details of directors/ trustees/ members/ shareholders.

Full Name	**Identity Number**	**State Employee Number**

…….. ……..

Authoring Signature Date

……..... …….....

Full name Capacity

....

Witness Witness

Commissioner of Oaths

6. Undertaking

by

……..

(the "Supplier")

vis a vis the

Kouga Local Municipality

("KLM")

WITH THIS FORM PLEASE ATTACH A LATEST MUNICIPAL BILLING CERTIFICATE FOR THE BUSINESS PREMISES AND ALSO FOR ALL THE DIRECTORS, MEMBERS OR OWNERS OF THE BUSINESS. IF OFFICE PREMISES ARE BEING RENTED PLEASE ATTACH COPY OF LEASE AGREEMENT.

Whereas:

(a) the Supplier delivers or renders services to KLM;

(b) KLM is liable to pay the Supplier for goods delivered or services rendered; and

(c) the Supplier is liable **to pay KLM or relevant Local Authority** any due municipal rates and taxes or municipal service charges and any other indebtedness **owed by the Supplier to the KLM or relevant Local Authority.**

Now therefore the Supplier undertakes the following:

1. In the event of the Supplier being in arrears in respect of any municipal rates and taxes, municipal services charges, or any other indebtedness owed by the Supplier to the relevant Local Authority; which is / are due:

   1.1 the Supplier shall make satisfactory and reasonable written settlement arrangements with the KLM or relevant Local Authority for the payment thereof; and

   1.2 failing which, the KLM may set-off any such due indebtedness owed by the Supplier to the KLM from any amount owed by the KLM to the Supplier;

2. To co-operate with the KLM and to do all things and sign all such documents (and / or procure same to be done) as may be necessary or requisite in order to give proper and due effect to the terms of this undertaking or any matter arising there from in accordance with its intent and purpose;

3. No extension of time or indulgence granted by the KLM shall be deemed in any way to affect, prejudice or derogate from its rights in any respect in terms of this undertaking, nor shall it in anyway be regarded as a waiver of the KLM's rights hereunder; and

4. The Supplier shall not be entitled to cede any of its right's nor delegate any of its obligations in terms of this undertaking to any other person without the prior written consent of the KLM.

Thus done and signed by the Supplier at …… on …… 20 ……

…… ……..

(The Supplier) duly authorized Witness